SERVING STATIONS

SERVING LINE FOOD SHIELD MODELS RS AFS-STSS

Designer series, adjustable food shield. Single tier-single sided. Front glass panel(s) are adjustable in 10 degree increments for flexibility and convertible for self-service of full-serve operation.

Certifications: NSF

PROJECT NAME:	
LOCATION:	
ITEM NO:	
QTY:	
MODEL NO:	
AIA NO:	
SIS NO:	
CSI SECTION:	11400

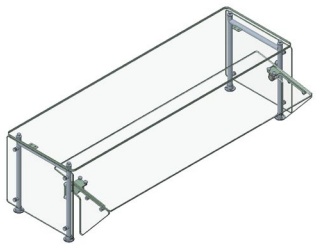

SHORT FORM SPEC: Randell designer series Adjustable Food Shields. Single tier-single sided design is convertible to accommodate both self-service or full-serve operation. Framework is constructed of 1" diameter stainless steel tubing with #4 satin finish. All glass panels shall be tempered with radius corners and polished edges. All glass panels are mounted to framework with fasteners through glass panels for secure mounting. Provided with 2" diameter round mounting flanges.

AVAILABLE MODELS:

- ☐ RS AFS-STSS-30
- ☐ RS AFS-STSS-36
- ☐ RS AFS-STSS-48
- ☐ RS AFS-STSS-60
- ☐ RS AFS-STSS-72
- ☐ RS AFS-STSS-86

FINISH:

- Stainless steel #4 finish

GLASS:

- 1/4" Tempered Glass: End Panels
- 3/8" Tempered Glass: Front Panels, Top/Horizontal Panels up to 48"
- 1/2" Tempered Glass: Top/Horizontal Panels over 48" length
- Radius corners
- Polished Edges

OPTIONS/ACCESSORIES:

- ☐ LED lighting
- ☐ Heatlamp with LED lighting
- ☐ Dimension modification (Consult factory)

ADDITIONAL RESOURCES:

Request A Quote

Sales Tools

Find A Rep

KCL AutoCAD/Revit

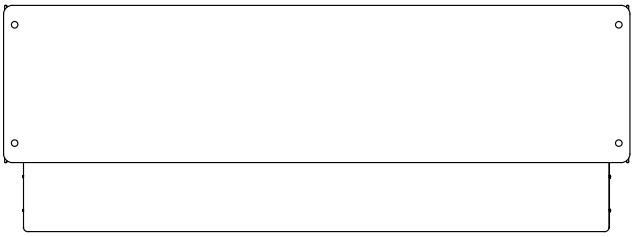

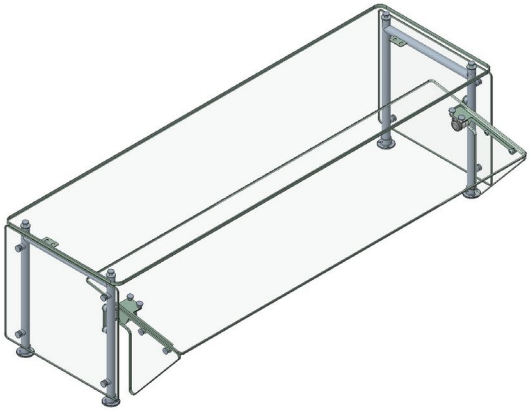

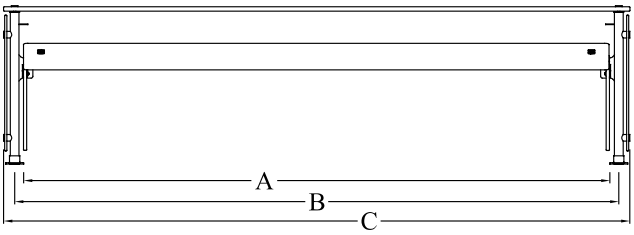

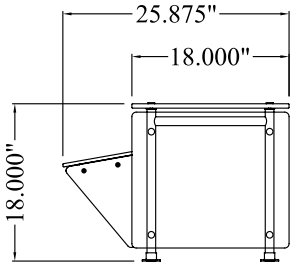

MODEL	DIMENSION: A (CLEAR BETWEEN FEET)	DIMENSION: B (POST-POST CENTER LINE)	DIMENSION: C (OVERALL LENGTH)	LED LIGHTING AMPS (120v)	HEATLAMP W/ LED LIGHTING AMPS (120v)	HEATLAMP W/ LED LIGHTING AMPS (208v)
RS AFS-STSS-30	25.125	27.25	29.75	1	3	1.7
RS AFS-STSS-36	31.125	33.25	35.75	1	3.9	2.2
RS AFS-STSS-48	43.125	45.25	47.75	1	5.8	3.3
RS AFS-STSS-60	55.125	57.25	59.75	1	7.9	4.6
RS AFS-STSS-72	67.125	69.25	71.75	1	10	5.7
RS AFS-STSS-86	81.125	83.25	85.75	1	9.8	5.8

© 2026 Electrolux Professional, Inc. All Rights Reserved.
Information known to be correct at time of creation. Please reference our website for the most updated product information and specifications.